Kopiranje bez odobrenja nije dozvoljeno.
Copying without permission is not allowed.

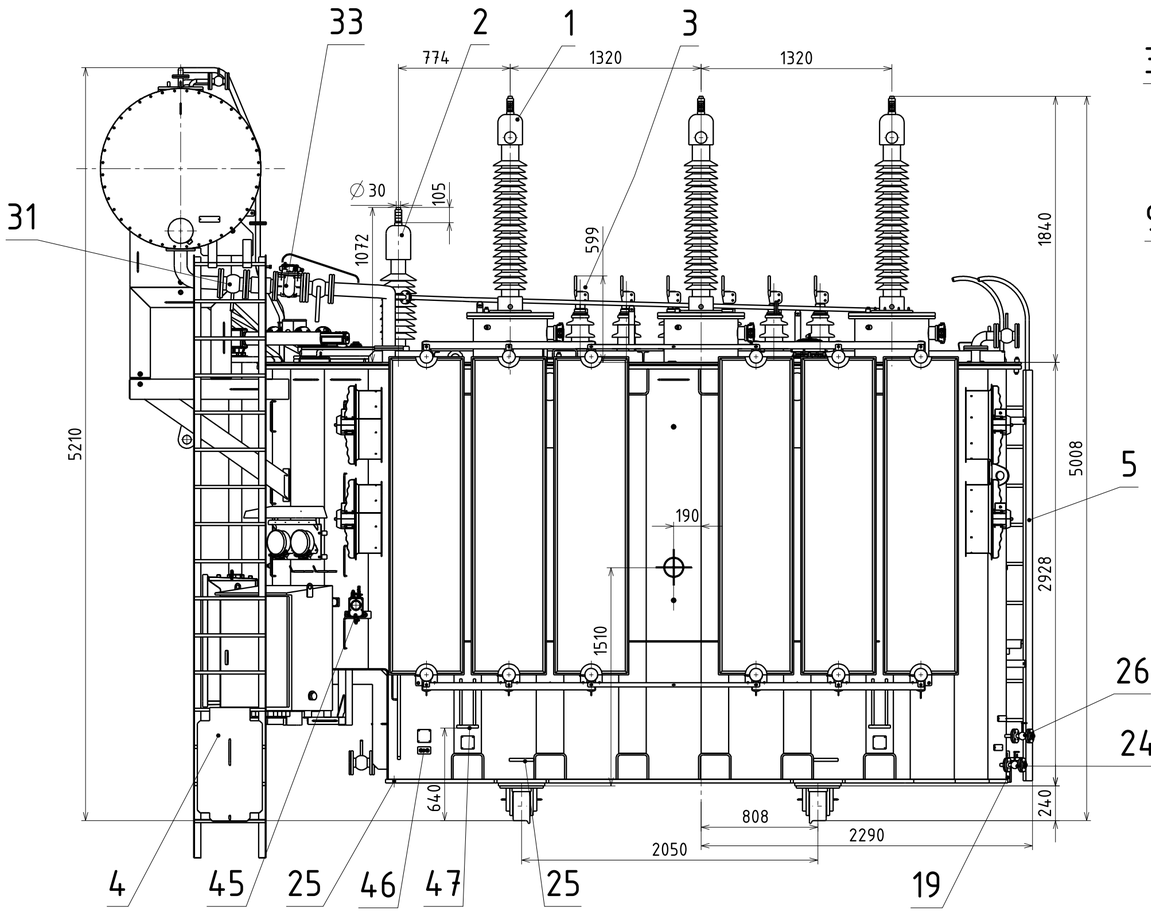

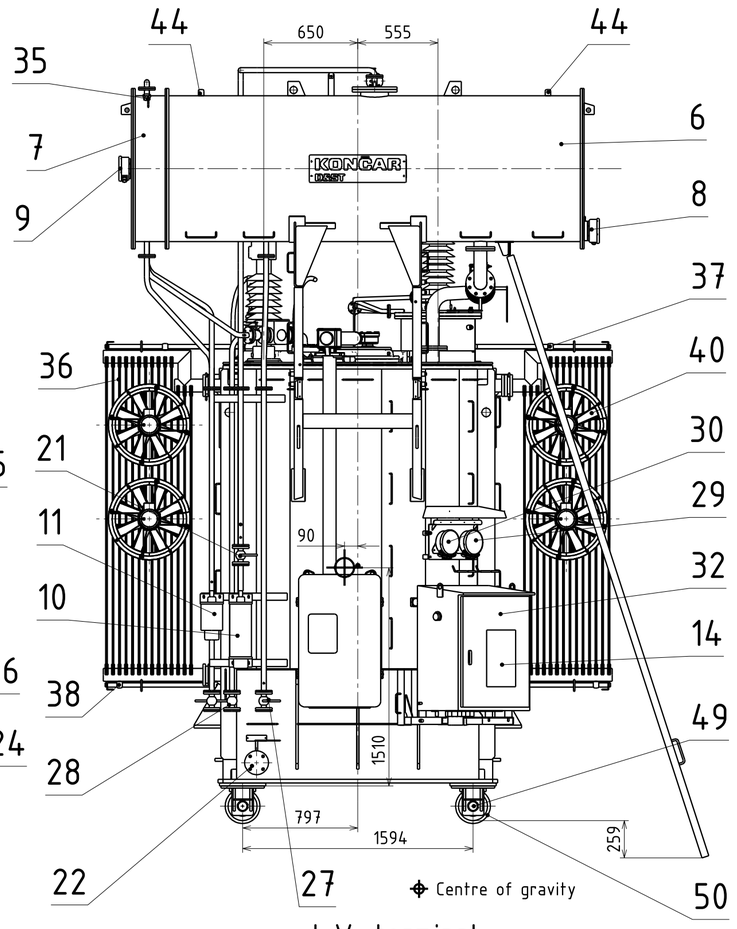

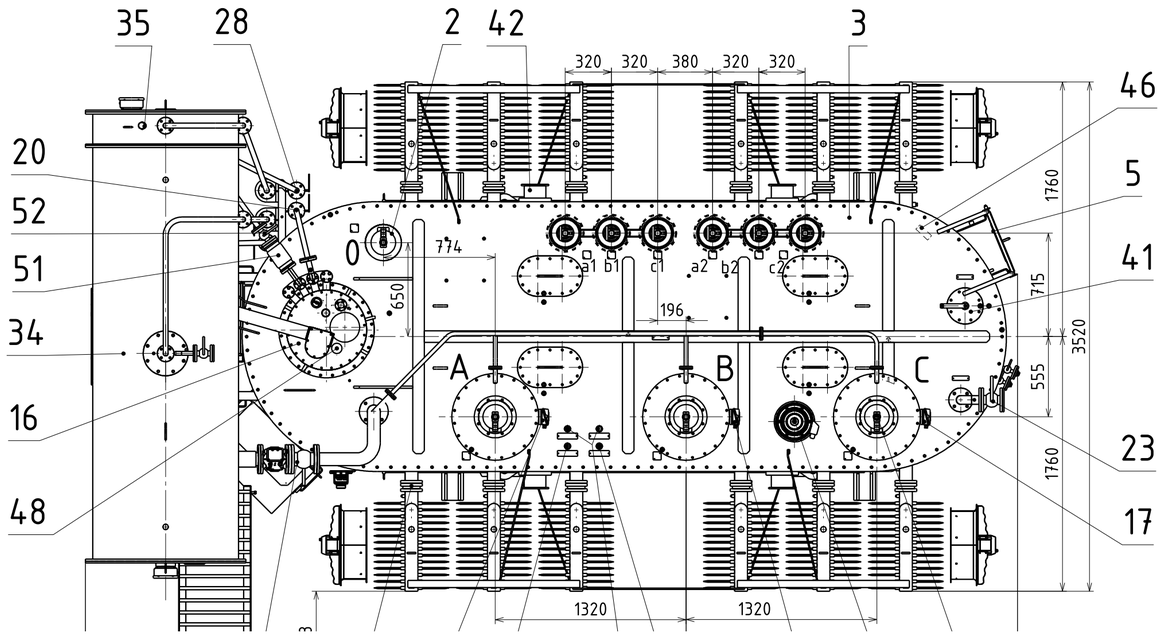

LIFTING AND UNTANKING

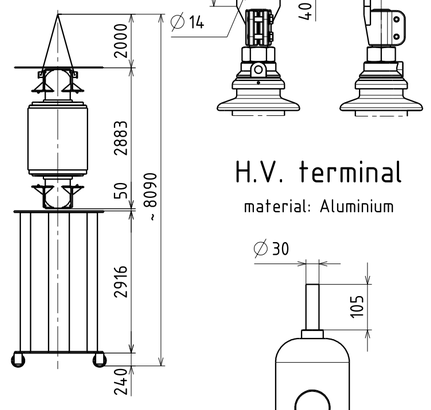

H.V. terminal

material: Aluminium

L.V. terminal

material: Copper

FOR TRANSPORT DISMOUNT:
1- CONSERVATOR WITH ADDITIONAL PARTS

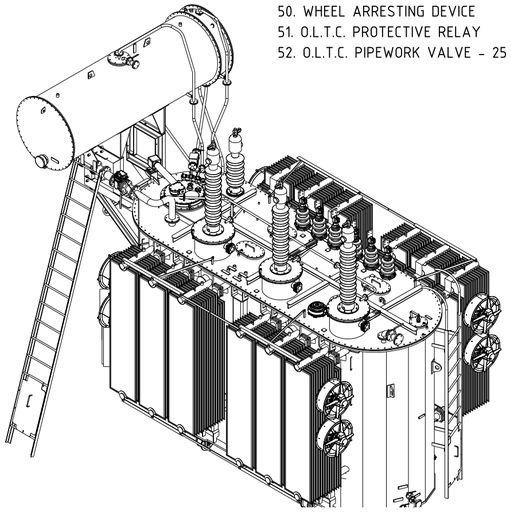

1. H.V. BUSHING - "TRENCH" COT 550-800
2. H.V. BUSHING - NEUTRAL - "TRENCH" COT 325-800
3. L.V. BUSHING - "KONČAR" 24kV/2000A
4. CONSERVATOR LADDER FOR BUCHHOLZ RELAY WITH SAFETY PLATES - NON PERMANENT
5. TANK LADDER WITH SAFETY PLATES
6. OIL CONSERVATOR
7. OIL CONSERVATOR FOR O.L.T.C.
8. OIL LEVEL INDICATOR
9. OIL LEVEL INDICATOR FOR O.L.T.C.
10. SILICAGEL BREATHER
11. SILICAGEL BREATHER FOR O.L.T.C.
12. THERMOMETER POCKET 1" (SPARE)
13. OIL TEMPERATURE INDICATOR THERMOMETER POCKET 1"
14. RATING PLATE
15. WINDING THERMOMETER POCKET 1"
16. ON - LOAD TAP CHANGER (O.L.T.C.)
17. CURRENT TRANSFORMATOR - TERMINAL - CT1
18. CURRENT TRANSFORMATOR - TERMINAL - CT2
19. DRAIN PLUG DIN42548
20. OIL DRAIN VALVE FOR O.L.T.C. - 25 mm
21. DEHYDRATING BREATHER VALVE - 25 mm
22. FILTER - DRAIN VALVE - 50mm
23. FILTERING VALVE - 50 mm
24. OIL SAMPLING VALVE BOTTOM -15mm
25. TRANSFORMER PULLING EYES
26. OIL SAMPLING VALVE TOP -15mm
27. OIL DRAIN VALVE FOR CONSERVATOR - 25 mm
28. OIL DRAIN VALVE FOR O.L.T.C. CONSERVATOR -25 mm
29. WINDING TEMPERATURE INDICATOR (W.T.I.)
30. OIL TEMPERATURE INDICATOR (O.T.I.)
31. MAIN PIPEWORK VALVE - 80 mm
32. SIGNALS AND COOLING CABINET
33. GAS AND OIL ACTUATED RELAY
34. DEAERATION VALVE FOR OIL CONSERVATOR - 25 mm
35. OIL FILLING PLUG FOR O.L.T.C. CONSERVATOR
36. COOLING RADIATOR
37. COOLING RADIATOR DEARATION PLUG
38. COOLING RADIATOR DRAIN PLUG
39. SHUT - OFF VALVE FOR COOLING RADIATOR
40. COOLING FAN
41. CORE EARTHING
42. TRANSFORMER LIFTING PROVISION
43. PRESSURE RELIEF DEVICE
44. DEAERATION PLUG FOR OIL CONSERVATOR
45. GAS SAMPLING DEVICE
46. MAIN EARTHING TERMINAL (2 pcs)
47. JACKING PAD
48. TEMPERATURE SENSOR PT100
49. WHEEL
50. WHEEL ARRESTING DEVICE
51. O.L.T.C. PROTECTIVE RELAY
52. O.L.T.C. PIPEWORK VALVE - 25 mm